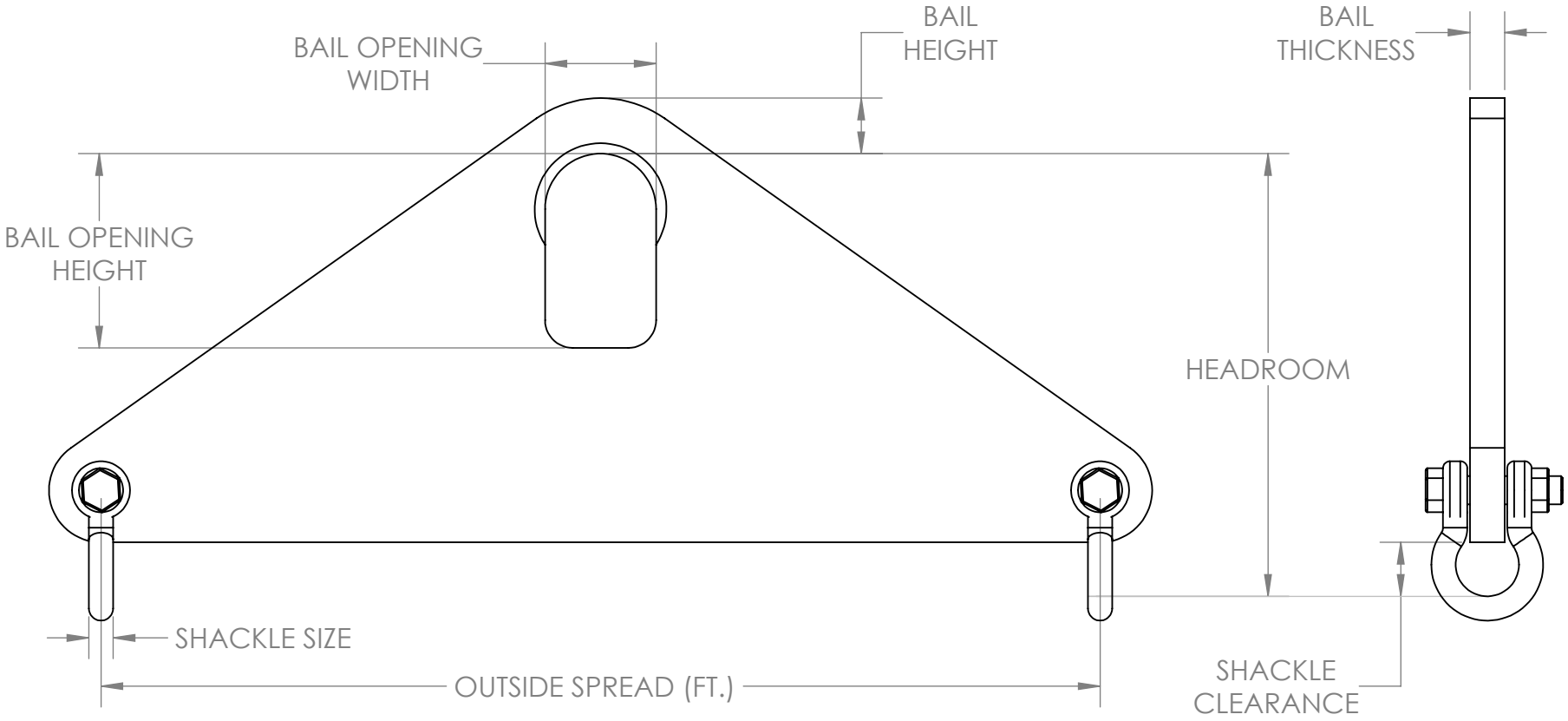
BAIL OPENING WIDTH
BAIL HEIGHT
BAIL THICKNESS
BAIL OPENING HEIGHT
HEADROOM
SHACKLE SIZE
OUTSIDE SPREAD (FT.)
SHACKLE CLEARANCE

PEERLESS®